TECO	OUTLINE DIMENSIONS	MOTOR TYPE: AEHFXX
DATE	3-PHASE INDUCTION MOTOR	FRAME NO. 112M

Pole	HP	kW	Hz	VOLT	r/min
4	5	3.7	50	220/380	1500

Ins	Rating	Dimension in	Approx Weight	Bearings
F	CONT.	mm		DE:6306ZZ NDE:6306ZZ

Totally Enclosed Fan Cooled Type. Squirrel-cage Rotor.

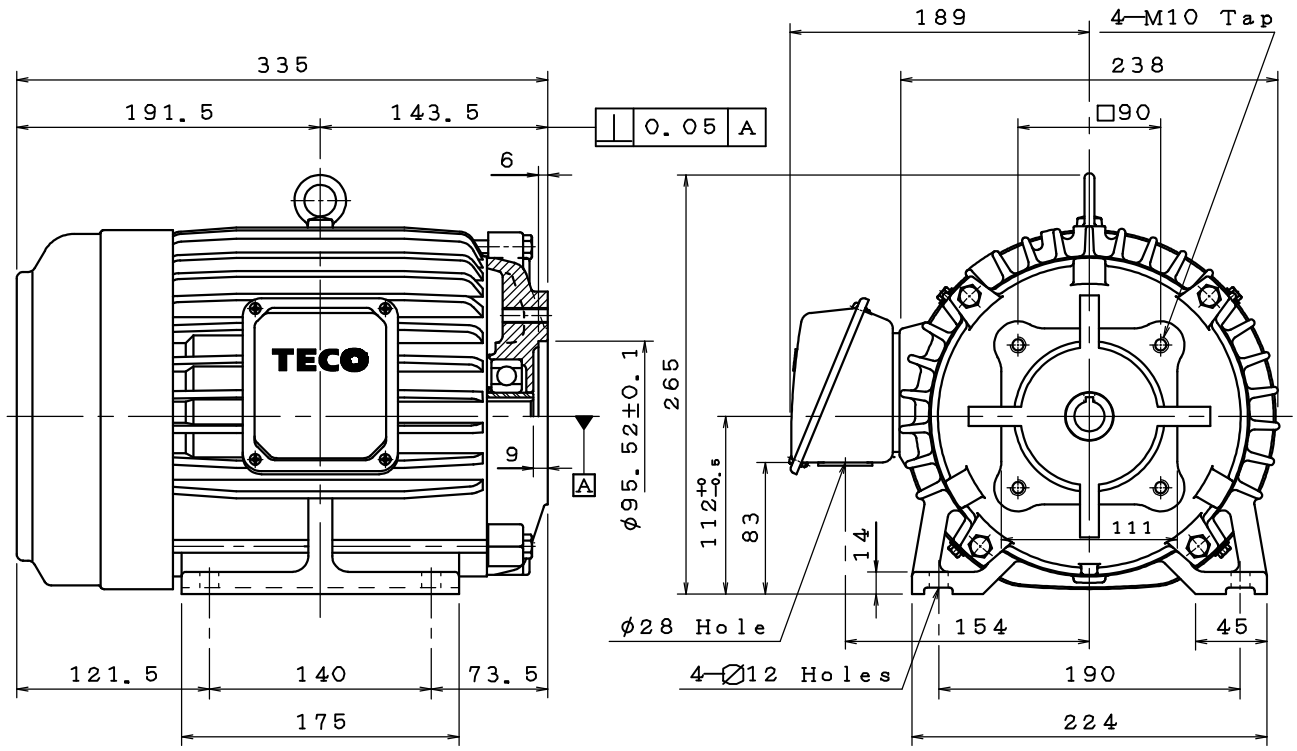

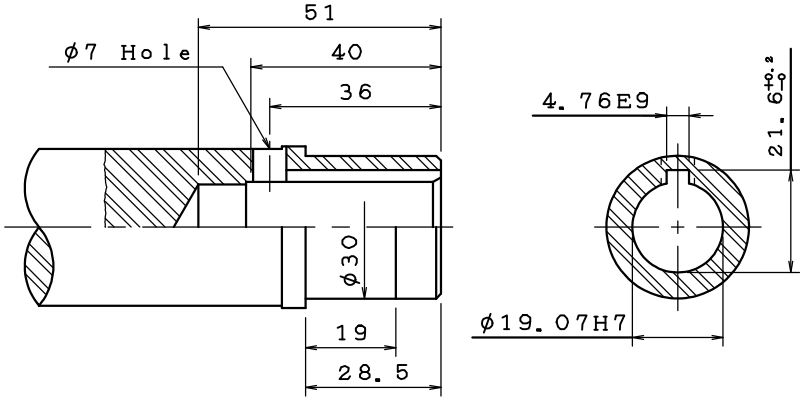

I1190070-01-00

DWG.	簡學民	05·28·19	東元電機股份有限公司 TECO Electric & Machinery Co., Ltd. TAIWAN
CHKD.	簡學民	05·28·19	
APPD.	徐聰豪	05·28·19	

DWG NO. 31049R354120